Valve Features	
Maximum working pressure	6000 psig (413bar)
Working temperature	-54°C~232°C
Orifice	0.25in.(6.4mm)
Cv	0.86

item	Component	Materials
1	Nut	316 SS/A479
2	Rear Ferrules	316 SS/A479
3	Front Ferrules	316 SS/A479
4	Body	316 SS/A479
5	Lower Stem	316 SS/A479
6	Union Nut	316 SS/A479
7	Bonnet	316 SS/A479
8	Packing	PTFE
9	Gland	316 SS/A479
10	Panel Nut	316 SS/A479
11	Upper Stem	316 SS/A479
12	Packing Bolt	316 SS/A479
13	Lock Nut	316 SS/A479
14	Handle	Anodized aluminium
15	Set Screw	304

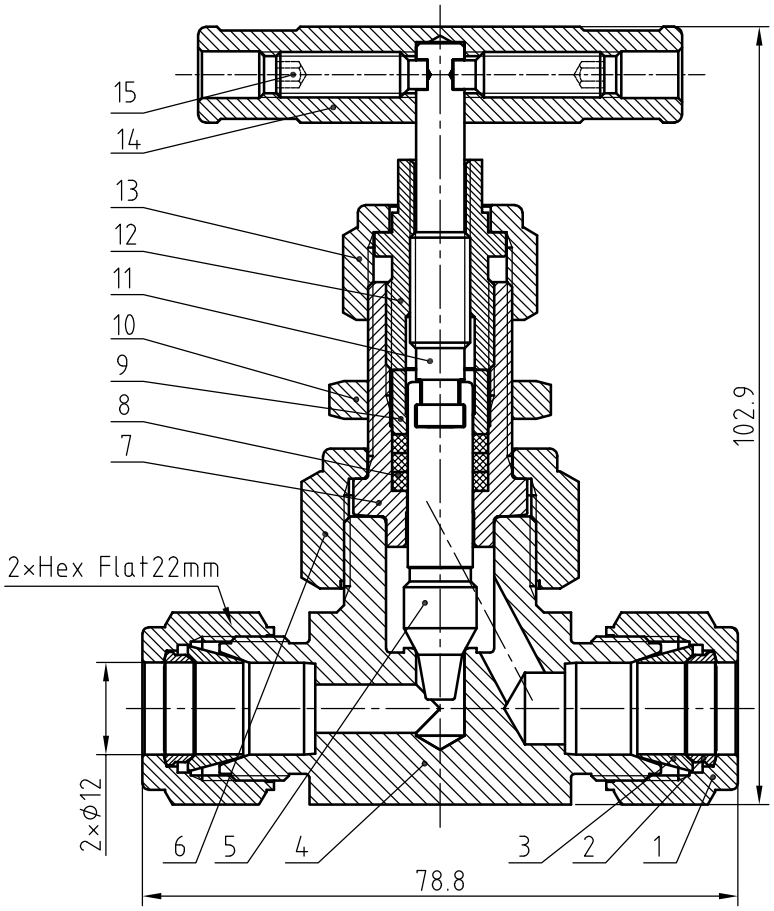

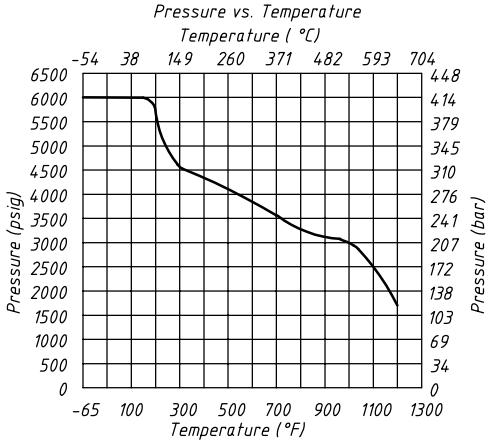

NOTE:Dimensions for reference only.

Linear unit of size: mm			Needle Valves				НТА-ПРОМ ТЕХНОЛОГИИ РЕШЕНИЯ СЕРВИС
	signature	date					
design			versions	1	proportion	1:1	VN8-2B-D-12M-R-S
audit							
ratify					Page 1/1		