Valve Features	
Maximum working pressure	6000 psig
Working temperature	-54°C~232°C
Orifice	10mm
Cv	1.8

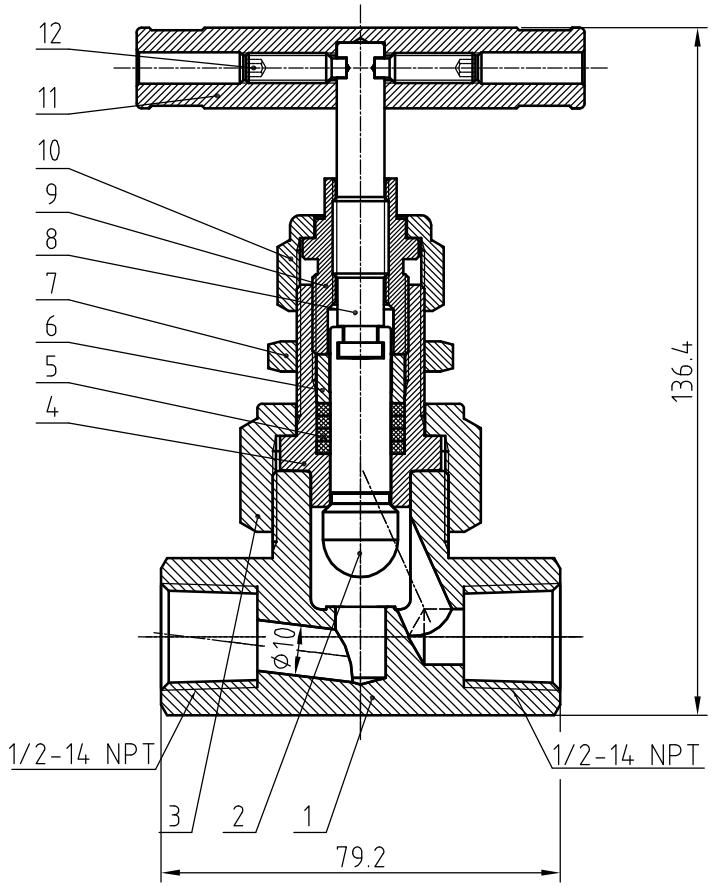

IDX	Designation	Materials
1	Body	316L/A479
2	Lower Stem	316L/A479
3	Union Nut	316L/A479
4	Bonnet	316L/A479
5	Packing	PTFE
6	Gland	316L/A479
7	Pannel Nut	Stainless steel
8	Upper Stem	316L/A479
9	Packing Bolt	316L/A479
10	Lock Nut	316L/A479
11	Handle	6061/B211
12	Set Screw	Stainless steel

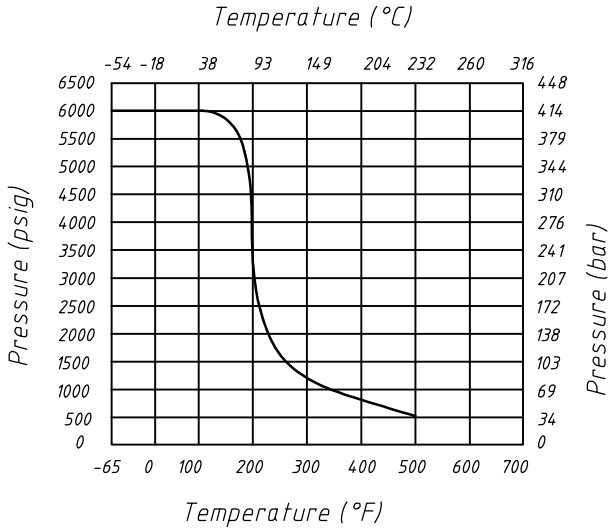

NOTE:Dimensions for reference only.

Linear unit of size: mm			Needle Valve				HTA-PROM ТЕХНОЛОГИИ РЕШЕНИЯ СЕРВИС
	signature	date					
design			versions	1	proportion	1:1	VN8-2C-F-8N-B-N-S
audit	✓	12.09.2025					
ratify					Page 1/1		