Valve Features	
Maximum working pressure	6000psig
Working temperature	-54℃~649℃
Orifice	4.0mm
Cv	0.35

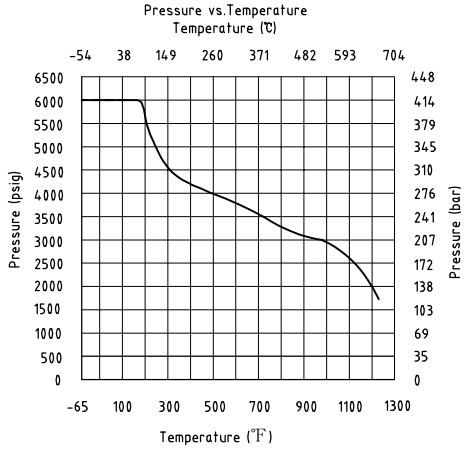

IDX	designation	materials
1	Lock Pin	Stainless Steel
2	Handle	Aluminum Oxide
3	Body	316 L/A479
4	Gland	316 L/A479
5	Bonnet	316 L/A479
6	Lock Nut	316 L/A479
7	Handle	Aluminum Oxide
8	Set Screw	Stainless Steel
9	Packing Bolt	316L/A479
10	Upper Stem	316L/A479
11	Gland	316L/A479
12	Packing	Graphite
13	Lower Stem	316L/A479
14	Pipe plugs	316L/A479

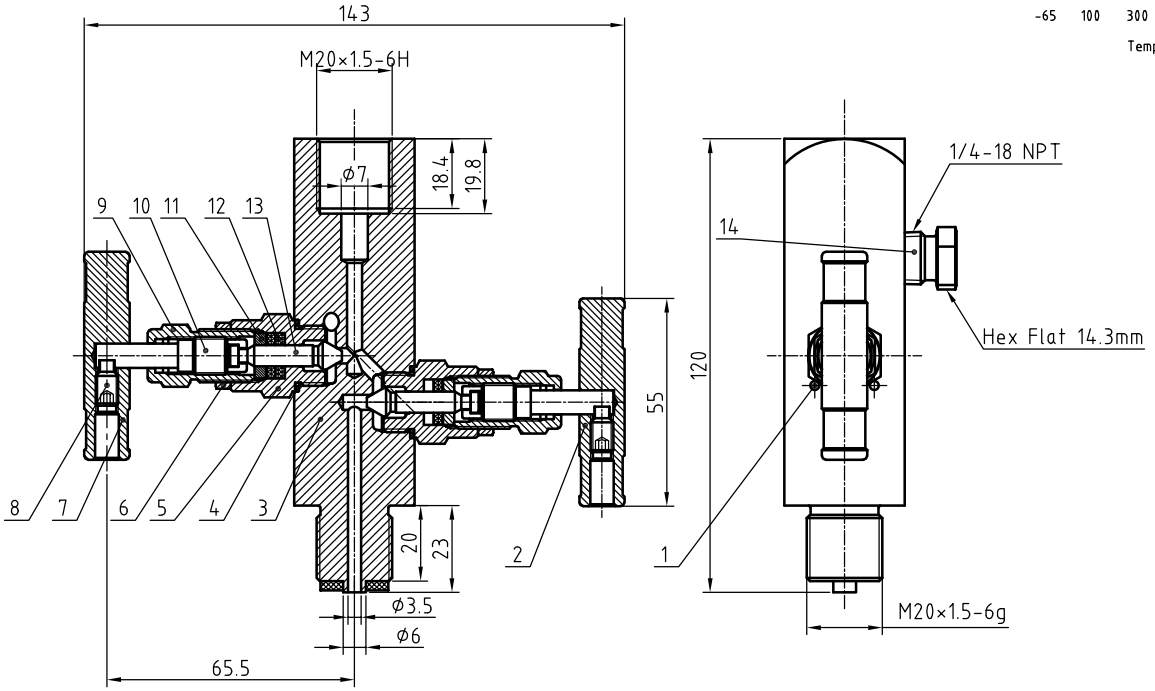

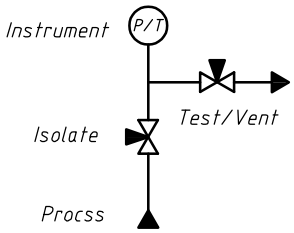

Linear unit of size: mm			2-Valve Manifolds			
	signature	date				
design			versions	1	proportion	1:2
audit						
ratify					Page 1/1	

NOTE: Dimensions for reference only.